CS375 Homework Assignment 8 (40 points)

Due date: 11/25/2026

1. (3 points)

   Fill out the following blanks for the instructions of a Turing machine that moves an input string over {a, b} to the right one cell position. The tape head initially is at the left end of the input string. The rest of the tape cells are blank. The machine will move the entire string to the right one cell position and leave all remaining tape cells blank. The tape head ends at the right end of the output string.

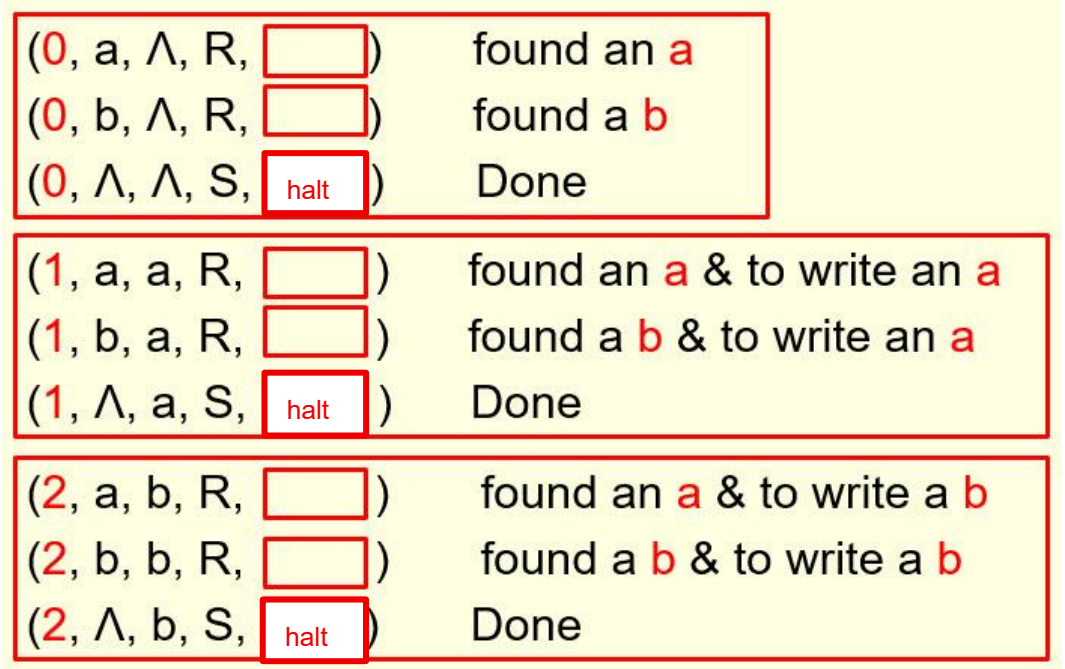

2. (21 points)

   To move an input string over {a, b} to the right two cells position, we can use the TM defined in Question #1 twice. It is also possible to move a string to the right two cells position directly. The instruction set for such a TM is as follows.

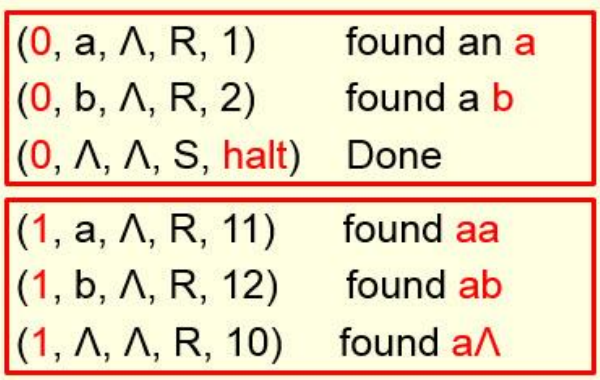

(2, a, Λ, R, 21)	found ba
(2, b, Λ, R, 22)	found bb
(2, Λ, Λ, R, 20)	found bΛ

(11, a, a, R, 11)	write an a, aa to go
(11, b, a, R, 12)	write an a, ab to go
(11, Λ, a, R, 10)	write an a, aΛ to go

(12, a, a, R, 21)	write an a, ba to go
(12, b, a, R, 22)	write an a, bb to to
(12, Λ, a, R, 20)	write an a, bΛ to go

(10, Λ, a, S, halt)	write an a, then halt
(10, a, a, S, halt)	write an a, then halt
(10, b, a, S, halt)	write an a, then halt

(21, a, b, R, 11)	write a b, aa to go
(21, b, b, R, 12)	write a b, ab to go
(21, Λ, b, R, 10)	write a b, aΛ to go

(22, a, b, R, 21)	write a b, ba to go
(22, b, b, R, 22)	write a b, bb to to
(22, Λ, b, R, 20)	write a b, bΛ to go

(20, Λ, b, S, halt)	write a b, then halt
(20, a, b, S, halt)	write a b, then halt
(20, b, b, S, halt)	write a b, then halt

The following is the process of moving the string bbaab to the right two cells position by this TM. For each step, fill out the blank representing the instruction to be used for that step, and then fill out the blank in the I/O tape representing the resulting content of the cell processed by that instruction and the blank representing the resulting state. (one point for each required instruction, one point for the resulting state after the execution of that instruction, and one point for the cell in the I/O tape processed by that instruction; blanks in the I/O tape representing cells processed before the current step will not be graded)

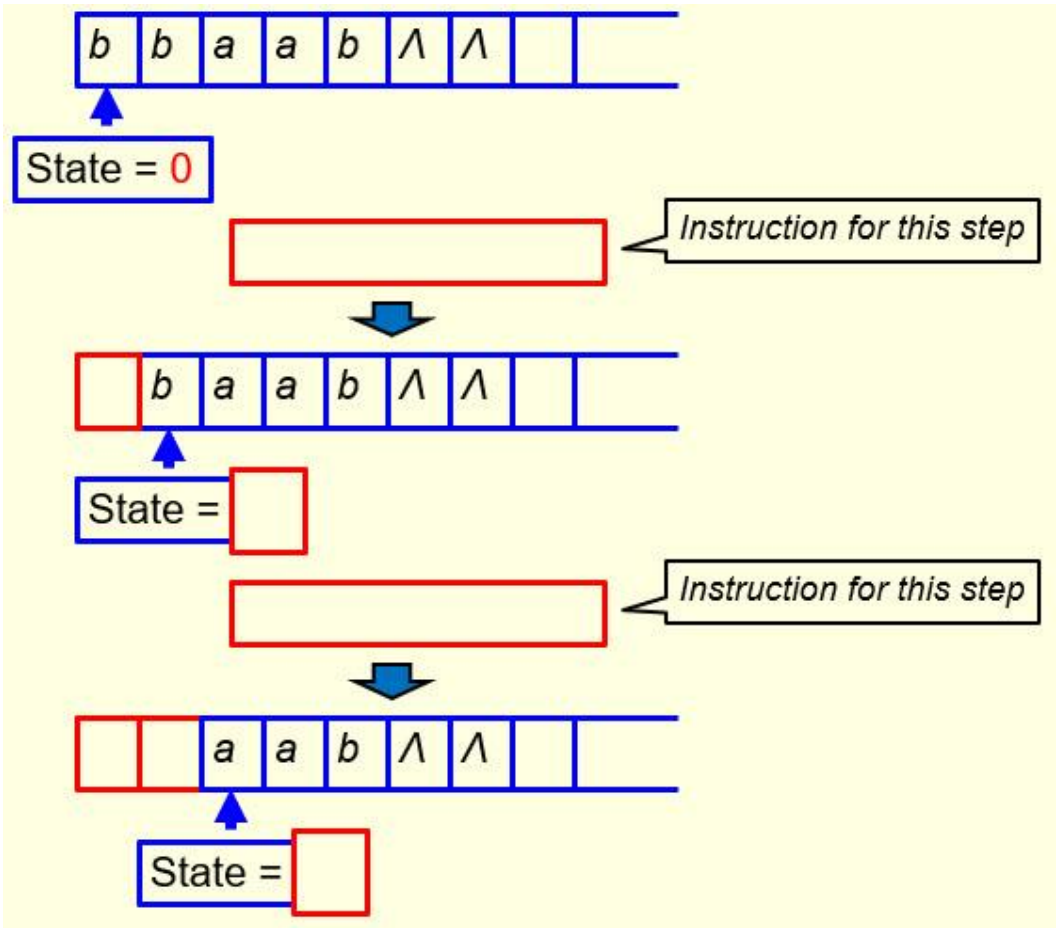
b b a a b Λ Λ
State = 0
Instruction for this step
b a a b Λ Λ
State =
Instruction for this step
a a b Λ Λ
State =

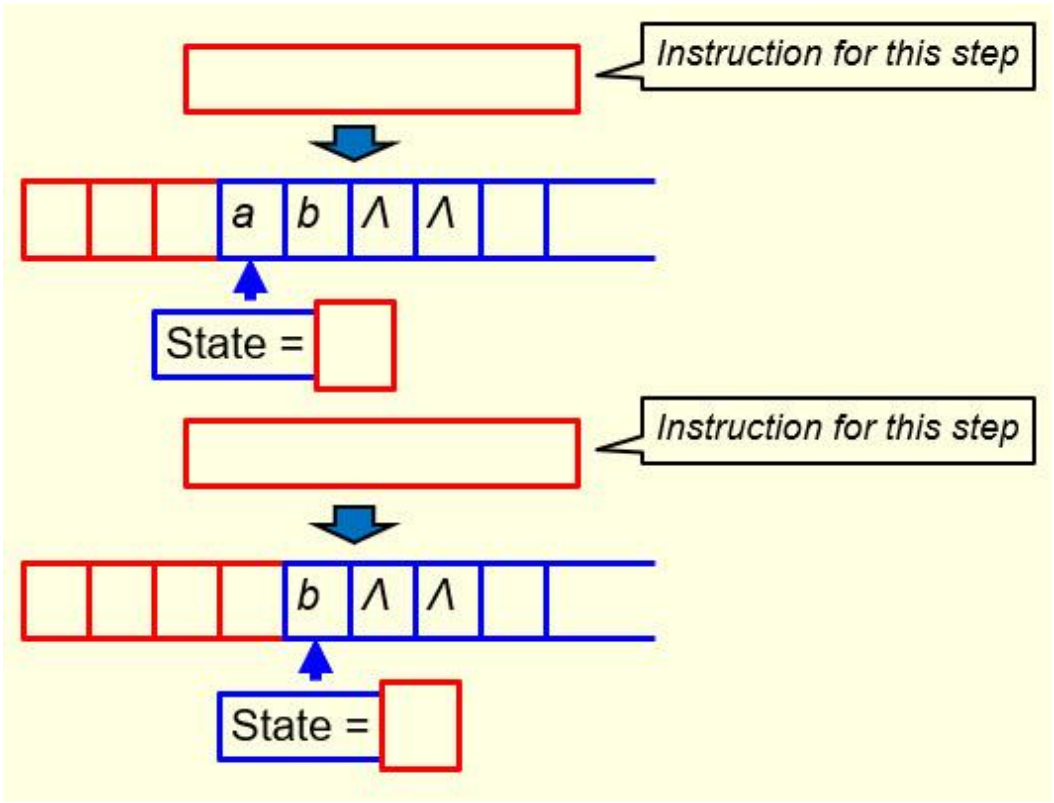
Instruction for this step
a b Λ Λ
State =
Instruction for this step
b Λ Λ
State =

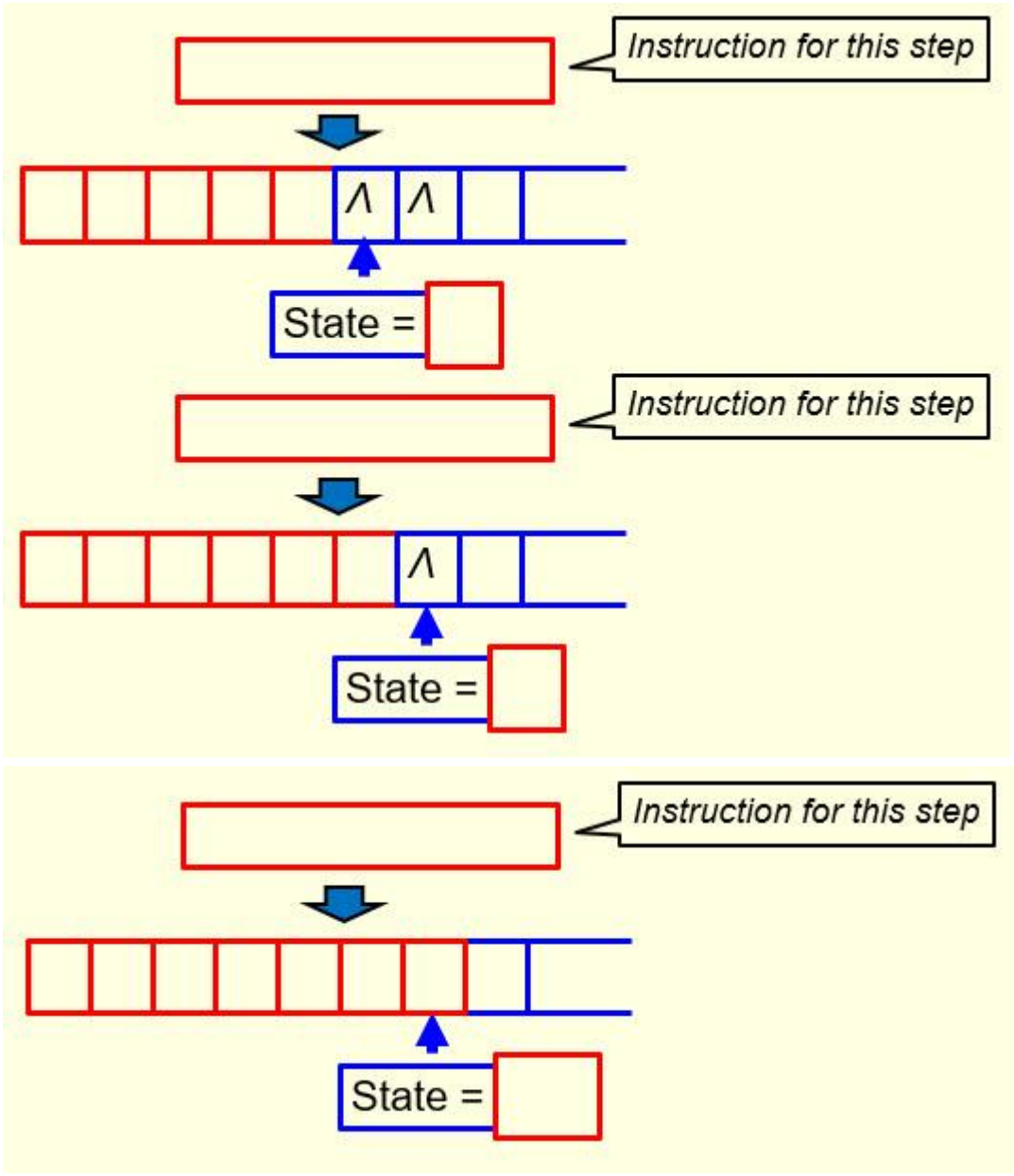

3. (16 points)

The following is the instruction set of a Turing machine (TM) that computes the sum of 2 and a given natural number represented as a binary string. The read/write head of the TM starts at the right end of the given natural number and halts at the left end of the output string. The start state of the TM is 0.

Move one cell left:
(0, 0, 0, L, 1)
(0, 1, 1, L, 1)

Add 1	
(1, 0, 1, L, 2)	Move left
(1, 1, 0, L, 1)	Carry
(1, Λ, 1, S, halt)	Done

Find left end of the string	
(2, 0, 0, L, 2)	
(2, 1, 1, L, 2)	
(2, Λ, Λ, R, halt)	Done

In the following, first fill out the blanks in the following state transition diagram of the TM. In the diagram, state H stands for the halt state. (3 points)

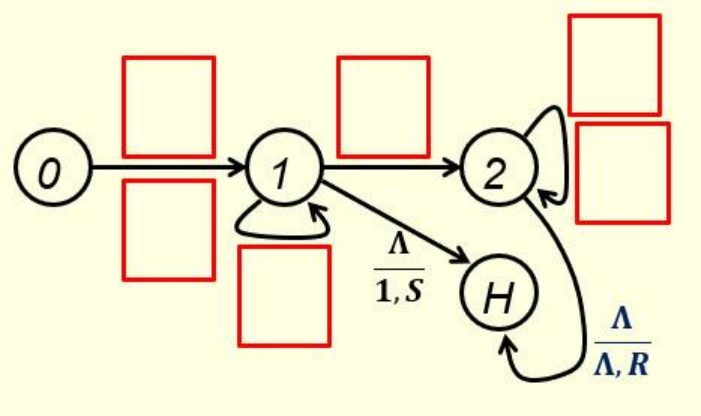

Next, fill out the blanks in the following sum computation process for the given natural number 55 (=110111_2). For each step, put the instruction to be used for that step in the blank on the left side, and then fill out the blank for the resulting state and the blank(s) in the I/O tape after the execution of that instruction on the right side. (13 points: one point for each instruction, one point for each new state, and one point for each newly computed bit in the I/O tape)

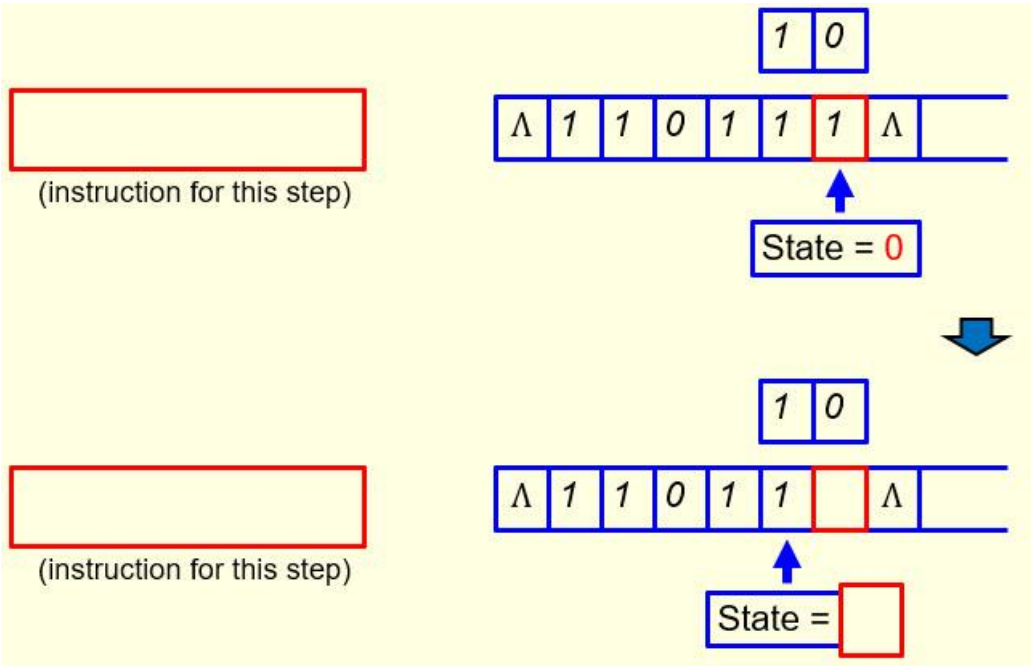
1 0
Λ 1 1 0 1 1 1 Λ
(instruction for this step)
State = 0

1 0
Λ 1 1 0 1 1 Λ
(instruction for this step)
State =

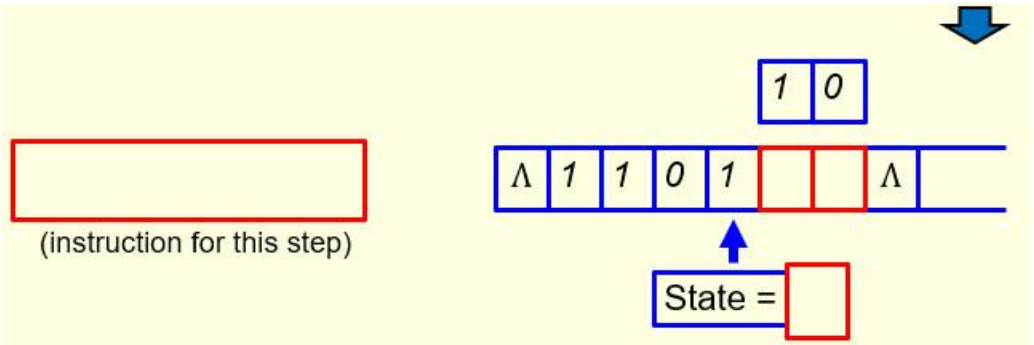
1 0
Λ 1 1 0 1 Λ
(instruction for this step)
State =

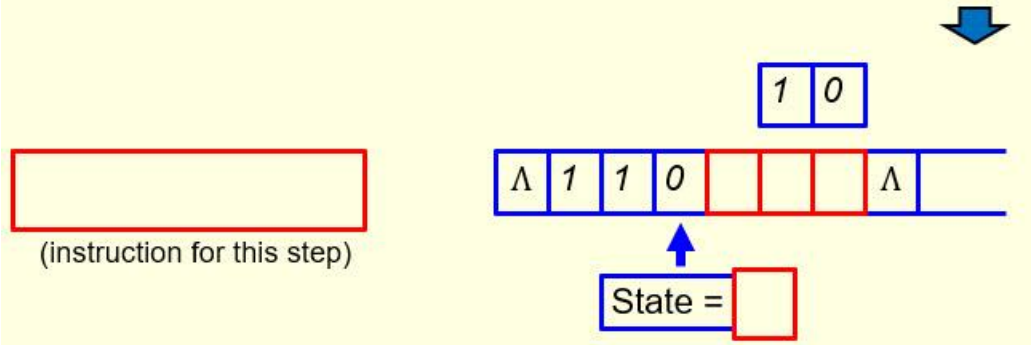
1 0
Λ 1 1 0 Λ
(instruction for this step)
State =

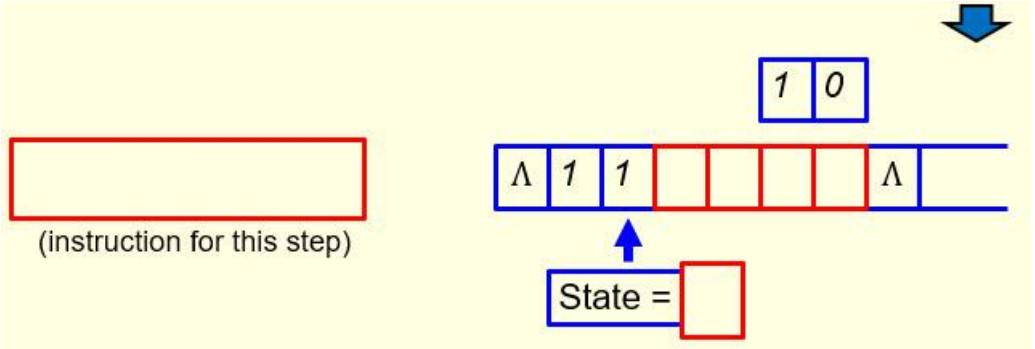
1 0
Λ 1 1 Λ
(instruction for this step)
State =

From this point on, every binary digit read by the TM will be kept the same until the left end of the string is reached.

- Your solutions must be typed (word processed) and submitted both as a pdf file and a word document to Canvas before 23:59 on11/25/2026
- Don’t forget to name your files as
  CS375_2026f_HW8_LastName.docx / CS375_2026f_HW8_LastName.pdf